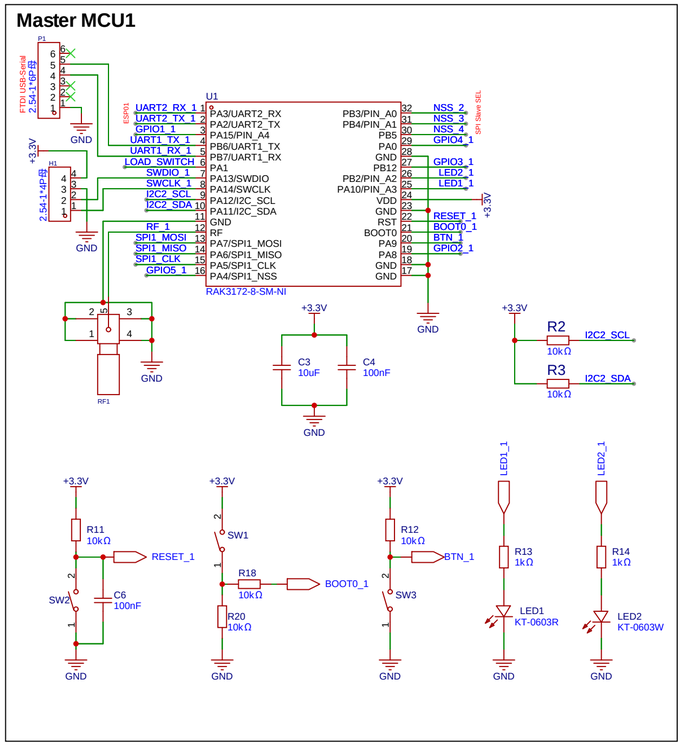

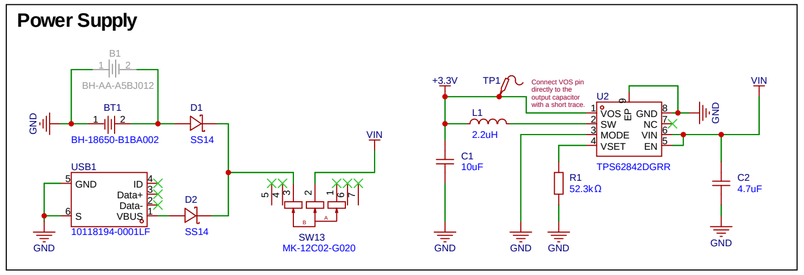

GPIO Connections

	MCU2	MCU3	MCU4
MCU1	GPIO1_1 R4 330Ω GPIO1_2 GPIO4_1 R7 330Ω GPIO4_2	GPIO2_1 R5 330Ω GPIO2_3 GPIO5_1 R8 330Ω GPIO5_3	GPIO3_1 R6 330Ω GPIO3_4
MCU2		GPIO6_2 R9 330Ω GPIO6_3 GPIO7_2 R15 330Ω GPIO7_3 GPIO14_2 R48 330Ω GPIO14_3	GPIO8_2 R10 330Ω GPIO8_4 GPIO9_2 R16 330Ω GPIO9_4 GPIO10_2 R19 330Ω GPIO10_4
MCU3			GPIO11_3 R21 330Ω GPIO11_4 GPIO12_3 R25 330Ω GPIO12_4 GPIO13_3 R26 330Ω GPIO13_4

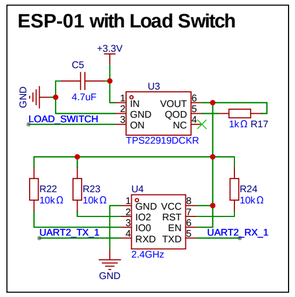

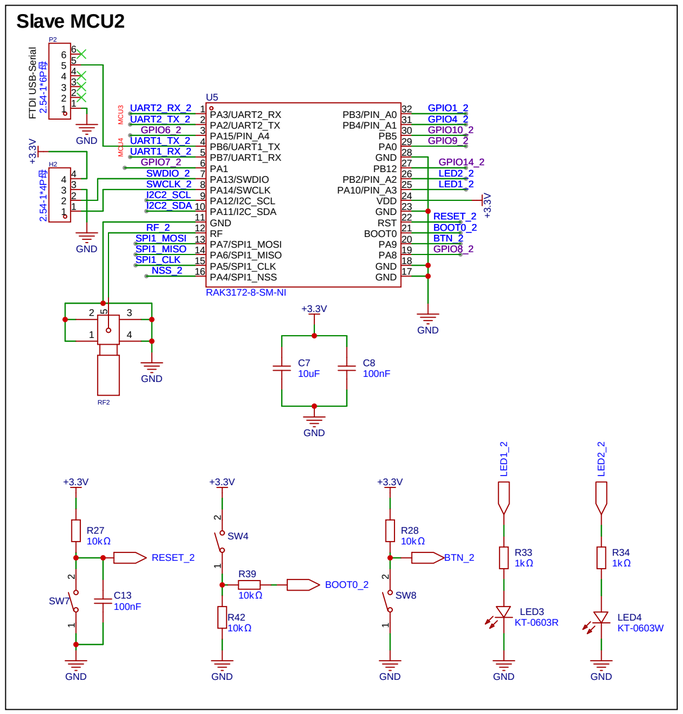

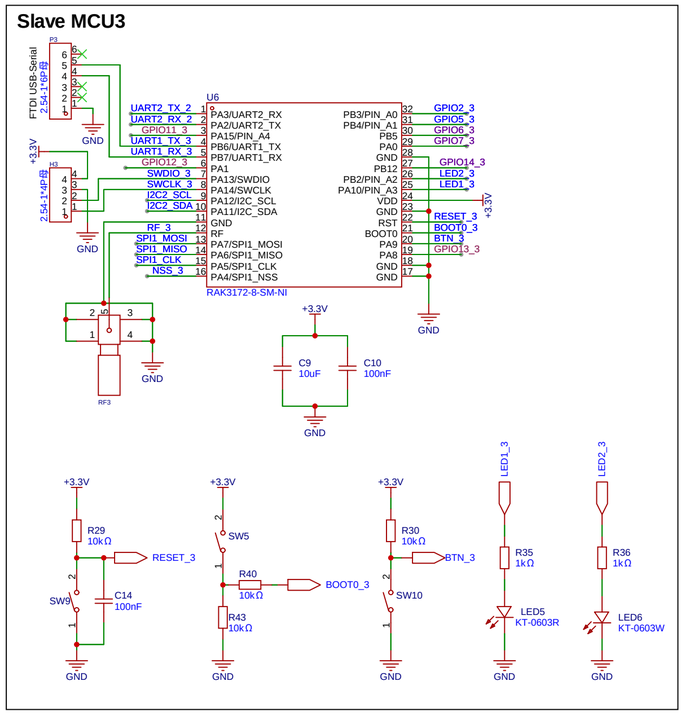

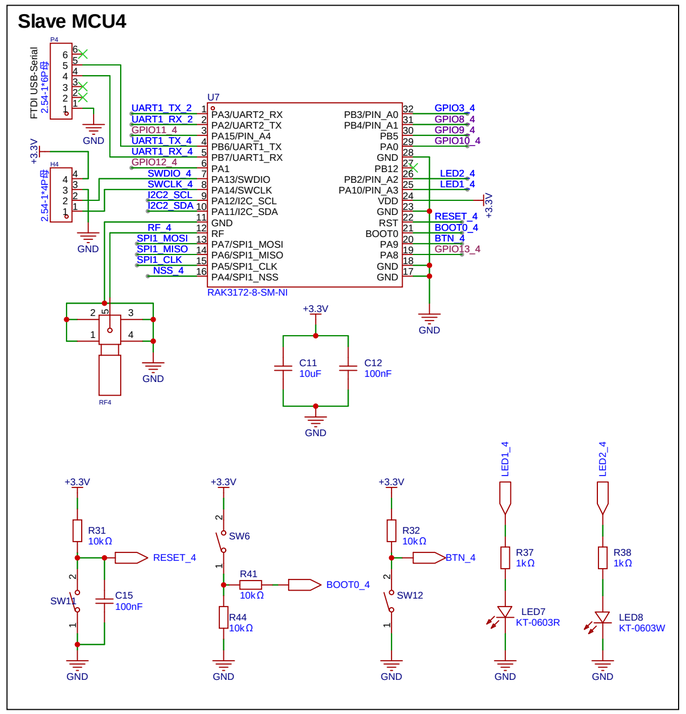

NOTE - If I2C bus doesn't work, there are 2 backups:
1) Using SPI interface with 3 slave selects
2) Making MCU2 new master and MCU3 and MCU4 slaves controlled by UART1 and UART2 interfaces of the master connecting to UART2 of both slaves

Schematic	Schematic1	Create at	2025-08-13
		Update at	2025-11-11
Board	Board1	Page	P1
Drawn	LoRa-Repeater		
Reviewed			
		Version	Size	Page 1 Total 1
EasyEDA		V1.0	A4	EasyEDA.com